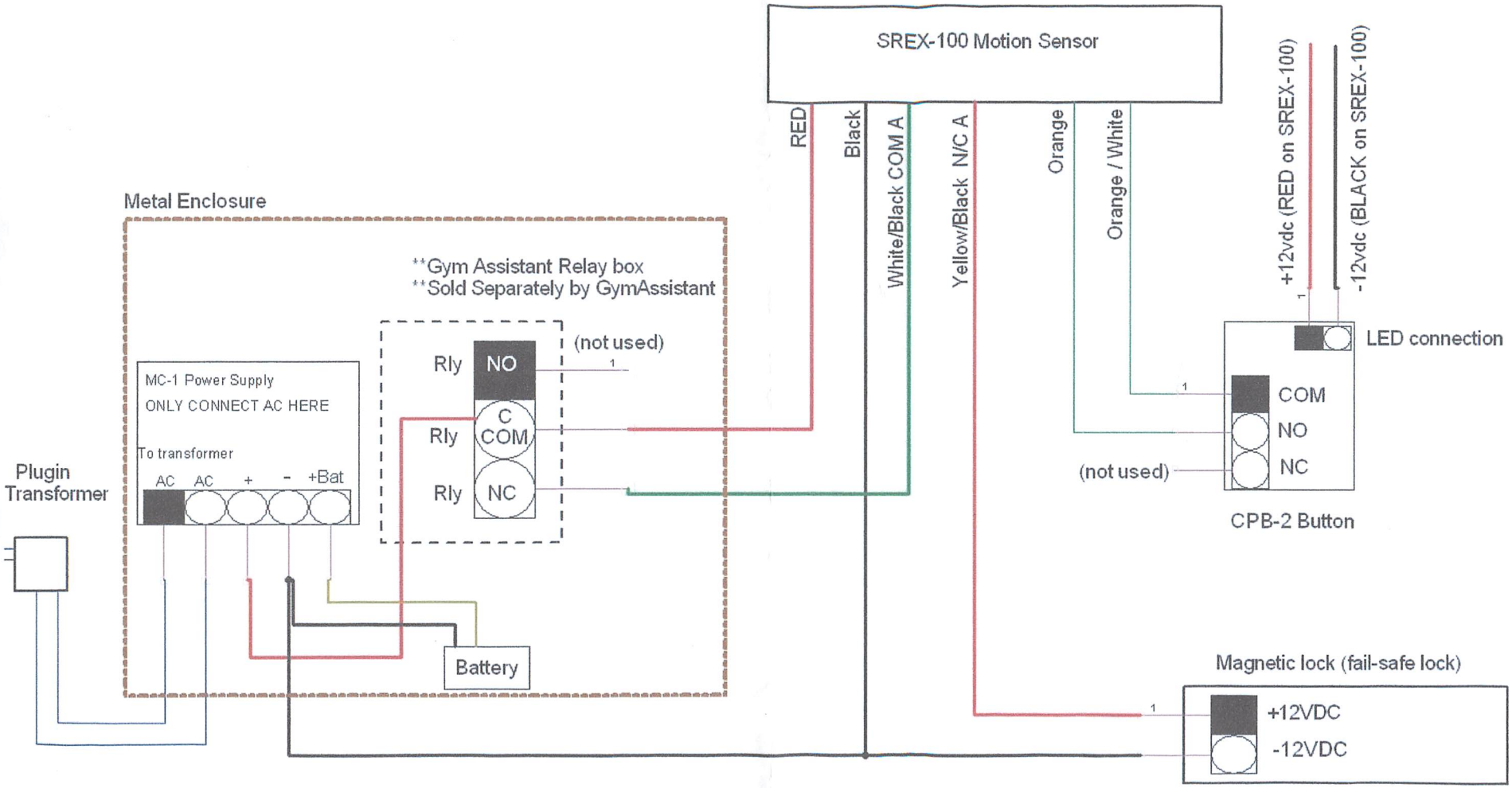

* 18 gauge/4 conductor copper stranded wire recommended.